BC92-TE-B User Guide

LPWA/GSM/GPRS Module Series

Rev. BC92-TE-B_User_Guide_V1.0

Date: 2019-06-24

Status: Preliminary

www.quectel.com

Our aim is to provide customers with timely and comprehensive service. For any assistance, please contact our company headquarters:

Quectel Wireless Solutions Co., Ltd.
Building 5, Shanghai Business Park Phase III (Area B), No.1016 Tianlin Road, Minhang District, Shanghai, China 200233
Tel: +86 21 5108 6236
Email: info@quectel.com

Or our local office. For more information, please visit:
http://www.quectel.com/support/sales.htm

For technical support, or to report documentation errors, please visit:
http://www.quectel.com/support/technical.htm
Or Email to: support@quectel.com

GENERAL NOTES

QUECTEL OFFERS THE INFORMATION AS A SERVICE TO ITS CUSTOMERS. THE INFORMATION PROVIDED IS BASED UPON CUSTOMERS' REQUIREMENTS. QUECTEL MAKES EVERY EFFORT TO ENSURE THE QUALITY OF THE INFORMATION IT MAKES AVAILABLE. QUECTEL DOES NOT MAKE ANY WARRANTY AS TO THE INFORMATION CONTAINED HEREIN, AND DOES NOT ACCEPT ANY LIABILITY FOR ANY INJURY, LOSS OR DAMAGE OF ANY KIND INCURRED BY USE OF OR RELIANCE UPON THE INFORMATION. ALL INFORMATION SUPPLIED HEREIN IS SUBJECT TO CHANGE WITHOUT PRIOR NOTICE.

COPYRIGHT

THE INFORMATION CONTAINED HERE IS PROPRIETARY TECHNICAL INFORMATION OF QUECTEL CO., LTD. TRANSMITTING, REPRODUCTION, DISSEMINATION AND EDITING OF THIS DOCUMENT AS WELL AS UTILIZATION OF THE CONTENT ARE FORBIDDEN WITHOUT PERMISSION. OFFENDERS WILL BE HELD LIABLE FOR PAYMENT OF DAMAGES. ALL RIGHTS ARE RESERVED IN THE EVENT OF A PATENT GRANT OR REGISTRATION OF A UTILITY MODEL OR DESIGN.

Copyright © Quectel Wireless Solutions Co., Ltd. 2019. All rights reserved.

About the Document

History

Revision	Date	Author	Description
1.0	2019-06-24	Glenn GE/ Erwin TANG	Initial

Contents

About the Document **2**
Contents **3**
Table Index **4**
Figure Index **5**

1 Introduction **6**
1.1. Safety Information 6

2 Product Concept **8**
2.1. Key Features 8
2.2. Functional Diagram 10
2.3. Interface Distribution Diagram 11
2.4. Arduino Interface Definition 13

3 Operation Procedures **14**
3.1. Operation Procedure with Single Board 14
3.1.1. Interface Diagram 15
3.1.2. Operation Procedure When Using Single Board 15
3.2. Operation Procedure with Multi Boards 17
3.2.1. Interface and Modification Diagrams 17
3.2.2. Operation Procedure When Using Multi Boards 19
3.2.3. Description of Pin Connection 19

4 Electrical Performance and Reliability **21**
4.1. Absolute Maximum Ratings 21
4.2. Operation and Storage Temperature 21

5 Mechanical Dimensions **23**
5.1. Mechanical Dimensions of BC92-TE-B 23
5.2. Top and Bottom View of BC92-TE-B 24

6 BC92-TE-B Kit and Accessories **26**
6.1. BC92-TE-B Kit 26
6.2. BC92-TE-B Accessories 27

7 Appendix A References **28**

Table Index

TABLE 1: KEY FEATURES OF BC92-TE-B 8
TABLE 2: INTERFACES OF BC92-TE-B 11
TABLE 3: PIN CONNECTION BETWEEN BC92-TE-B AND STM32-L476RG MCU 19
TABLE 4: ABSOLUTE MAXIMUM RATINGS 21
TABLE 5: OPERATING TEMPERATURE 21
TABLE 6: ACCESSORY LIST 27
TABLE 7: RELATED DOCUMENTS 28
TABLE 8: TERMS AND ABBREVIATIONS 28

Figure Index

FIGURE 1: FUNCTIONAL DIAGRAM OF BC92-TE-B 10
FIGURE 2: INTERFACE DISTRIBUTION DIAGRAM OF BC92-TE-B 11
FIGURE 3: ARDUINO INTERFACE DEFINITION 13
FIGURE 4: INTERFACE DIAGRAM WHEN USING BC92-TE-B ALONE 15
FIGURE 5: UART PORTS DISPLAYED ON PC 16
FIGURE 6: INTERFACE DIAGRAM WHEN USING MULTI BOARDS 17
FIGURE 7: STM32-NUCLEO MODIFICATION DIAGRAM (TOP VIEW) 18
FIGURE 8: STM32-NUCLEO MODIFICATION DIAGRAM (BOTTOM VIEW) 18
FIGURE 9: ST-LINK INTERFACE DISPLAYED ON PC 19
FIGURE 10: PIN CONNECTION BETWEEN BC92-TE-B AND STM32-L476RG MCU 20
FIGURE 11: DIMENSIONS OF BC92-TE-B (TOP VIEW) 23
FIGURE 12: TOP VIEW OF THE BC92-TE-B 24
FIGURE 13: BOTTOM VIEW OF THE BC92-TE-B 25
FIGURE 14: BC92-TE-B KIT 26
FIGURE 15: BC92-TE-B AND ACCESSORIES 27

1 Introduction

In order to help customers to develop applications with Quectel BC92 module, Quectel offers corresponding TE-B evaluation board to test the module. This document helps customers quickly understand BC92-TE-B interface specifications, electrical and mechanical details and how to use it.

1.1. Safety Information

The following safety precautions must be observed during all phases of the operation, such as usage, service or repair of any cellular terminal or mobile incorporating BC92 module. Manufacturers of the cellular terminal should send the following safety information to users and operating personnel, and incorporate these guidelines into all manuals supplied with the product. If not so, Quectel assumes no liability for the customers' failure to comply with these precautions.

	Full attention must always be given to driving to reduce the risk of an accident. Using a mobile while driving (even with a handsfree kit) causes distraction and can lead to an accident. Please comply with laws and regulations restricting the use of wireless devices while driving.
	Switch off the cellular terminal or mobile before boarding an aircraft. The operation of wireless appliances in an aircraft is forbidden to prevent interference with communication systems. If the device offers an Airplane Mode, then it should be enabled prior to boarding an aircraft. Please consult the airline staff for more restrictions on the use of wireless devices on boarding the aircraft.
	Wireless devices may cause interference on sensitive medical equipment, so please be aware of the restrictions on the use of wireless devices when in hospitals, clinics or other healthcare facilities.
	Cellular terminals or mobiles operating over radio signals and cellular network cannot be guaranteed to connect in all possible conditions (for example, with unpaid bills or with an invalid (U)SIM card). When emergent help is needed in such conditions, please remember using emergency call. In order to make or receive a call, the cellular terminal or mobile must be switched on in a service area with adequate cellular signal strength.

	The cellular terminal or mobile contains a transmitter and receiver. When it is ON, it receives and transmits radio frequency signals. RF interference can occur if it is used close to TV set, radio, computer or other electric equipment.
	In locations with potentially explosive atmospheres, obey all posted signs to turn off wireless devices such as your phone or other cellular terminals. Areas with potentially explosive atmospheres include fueling areas, below decks on boats, fuel or chemical transfer or storage facilities, areas where the air contains chemicals or particles such as grain, dust or metal powders, etc.

2 Product Concept

BC92-TE-B is a LPWA/GSM/GPRS evaluation board which supports Arduino interface. Designed in 100.0mm × 95.0mm × 1.6mm form factor, BC92-TE-B can be used either alone or in conjunction with STM32 Nucleo-64 development board, in order to develop and debug applications for communication with mobile network operators' infrastructural equipment through the NB-IoT radio protocol (3GPP Rel-13 and 3GPP Rel-14*) or the GSM/GPRS radio protocol.

2.1. Key Features

The following table describes the detailed features of BC92-TE-B.

Table 1: Key Features of BC92-TE-B

Feature	Details
Power Supply	**USB interface:** Supply voltage: 4.75V ~ 5.25V; Typical supply voltage: 5.0V **Arduino interface:** Supply voltage: 4.75V ~ 5.25V; Typical supply voltage: 5.0V **Power adapter interface:** Supply voltage: 4.75V ~ 5.25V; Typical supply voltage: 5.0V
Transmitting Power	**NB-IoT:** 23dBm±2dB **GSM/GPRS:** ● Class 4 (2W)：GSM850 and EGSM900 ● Class 1 (1W)：DCS1800 and PCS1900
Temperature Range	Operation temperature range: -25°C ~ +75°C [1)] Extended temperature range: -40°C ~ +85°C [2)] Storage temperature range: -40°C ~ +90°C
USIM Interface	Support 1.8/3.0V external USIM card
UART Switch	Used to switch the communication object of BC92 main UART port

USB Interfaces	Support two UART ports **Main port (USB Serial Converter A):** ● Used for AT command communication and data transmission, baud rates 2400bps, 4800bps, 9600bps (default), 14400bps, 19200bps, 28800bps, 33600bps, 38400bps and 57600bps are supported ● Main port can also be used for firmware upgrading*, and the baud rate is 921600bps ● When the module is communicating with MCU, please keep USB Serial Converter A unconnected. **Debug port (USB Serial Converter B):** ● Debug port is used for debugging and firmware upgrading ● Only support 921600bps baud rate.
Arduino Interface	Used for connection with STM32 Nucleo-64 development board
RESET Button	Used to reset BC92 module
PWRKEY Button	Used to power on BC92 module
PSM_EINT Button	Used to wake up BC92 module from PSM
Physical Characteristics	Size: (100.0±0.15)mm × (95.0±0.15)mm × (1.6±0.2mm)
Firmware Upgrade	Firmware upgrade via main port, debug port or DFOTA
Antenna Interface	Connected to antenna pad with 50Ω impedance control
SMS*	Text and PDU modes

NOTES

1. [1)] Within operation temperature range, the module is 3GPP compliant.
2. [2)] Within extended temperature range, the module remains the ability to establish and maintain functions such as SMS and data transmission, without any unrecoverable malfunction. Radio spectrum and radio network will not be influenced. While there may be several parameters, such as P_{out} reducing in value, exceeding the specified tolerances of 3GPP. When the temperature returns to the normal operating temperature level, the module will comply with 3GPP specifications again.
3. The peak current of the GSM part of the module reaches 1.6A. When the GSM part works, power should be supplied with a power adapter, of which power supply capacity should be no less than 2A.
4. "*" means under development.

2.2. Functional Diagram

The following figure shows a block diagram of BC92-TE-B.

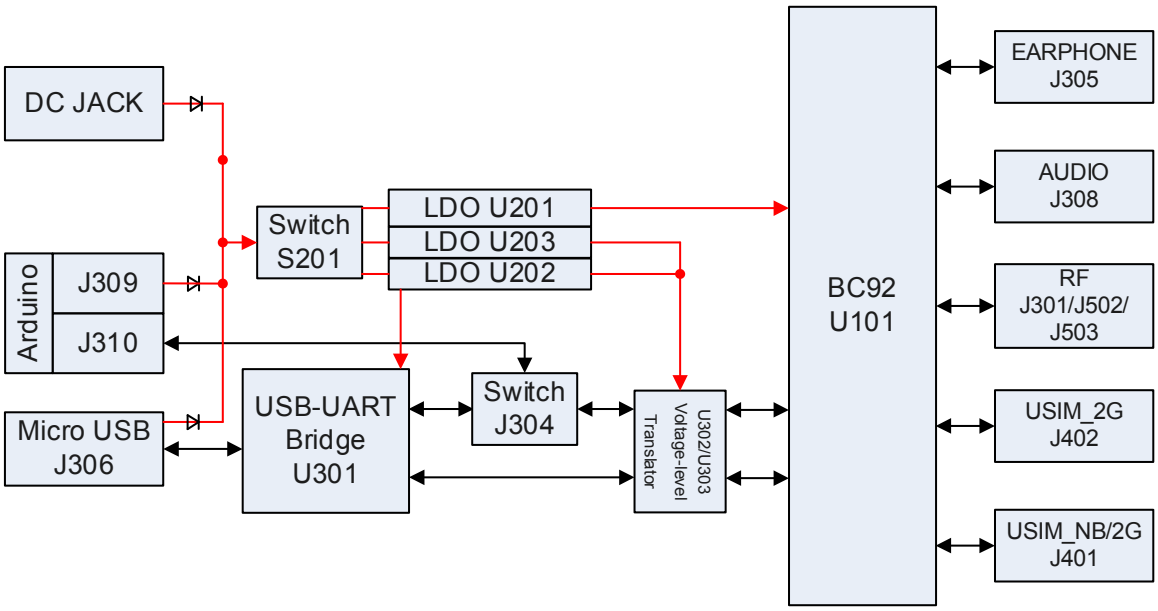

Figure 1: Functional Diagram of BC92-TE-B

2.3. Interface Distribution Diagram

The following figure shows an interface distribution diagram of BC92-TE-B.

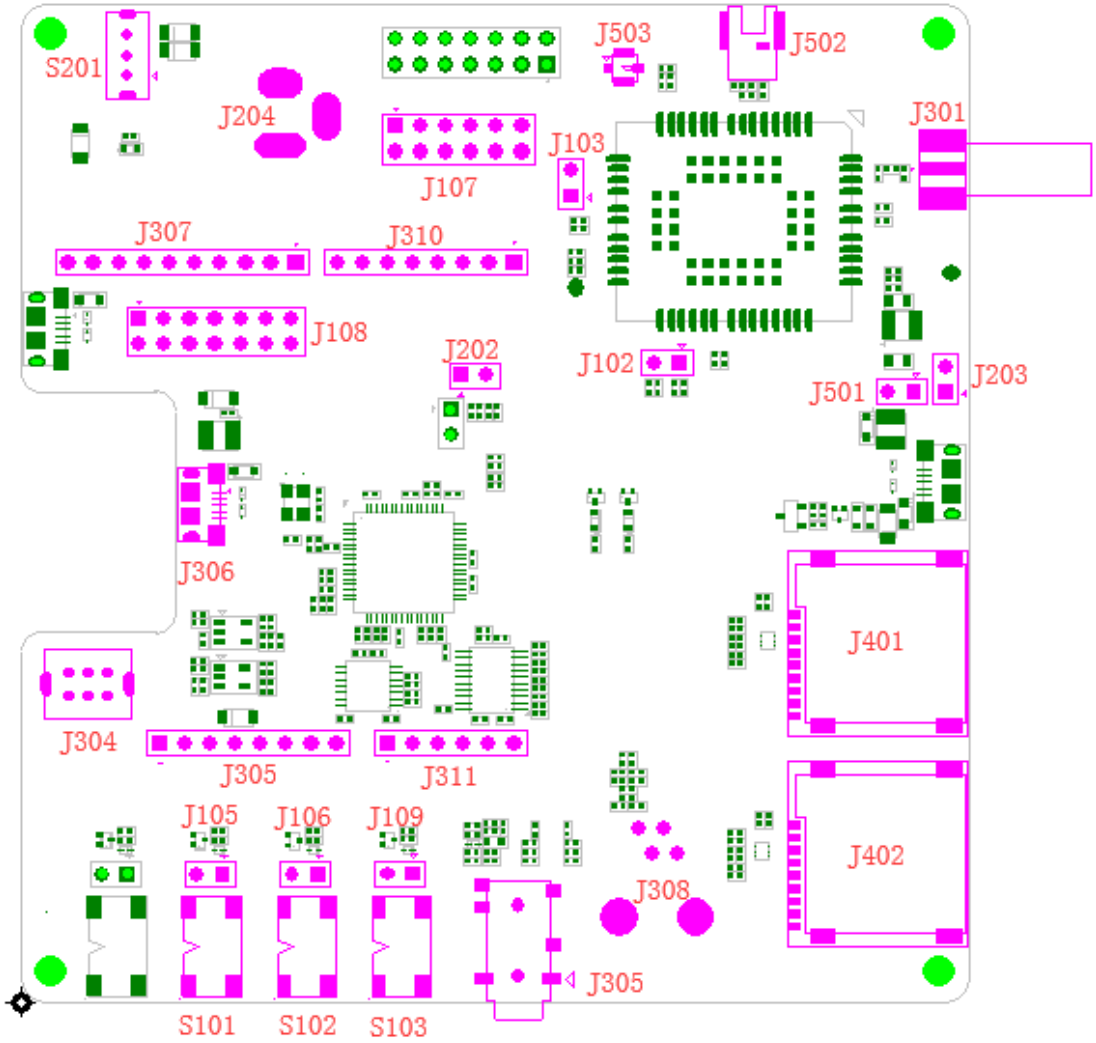

Figure 2: Interface Distribution Diagram of BC92-TE-B

The table below shows the description of BC92-TE-B interfaces.

Table 2: Interfaces of BC92-TE-B

Interface	Designator	Description
Power Supply	J306	Power supply for USB interface
	J204	Power supply for Power Adapter interface

	J309	Power supply for Arduino interface
USB Interface	J306	Support two UART ports
USIM Card Interface	J401, J402	Micro USIM card connector
Arduino Interface	J307, J309, J310, J311	Standard Arduino interface
RF Antenna Interface	J301	RF SMA connector
UART Switch	J304	Used to switch communication objects of BC92 main port: “BC92 TO USB” or “BC92 TO MCU”
Power Supply Switch	S201	Used for on-off control of power supply
PWRKEY Button	S101	Used to turn on BC92 module
RESET Button	S102	Used to reset BC92 module
PSM_EINT Button	S103	Used to wake up BC92 from PSM
Network Status Indicator	D101	Used to BC92 Network Status Indicator
Audio Interface	J305、J308	BC92 audio interface
LED Indicator	D208	Used to indicate the power on/off status
Test Points	J102, J103, J105, J106, J107, J108, J109, J202, J203	Used to test the basic functionalities of BC92 module

2.4. Arduino Interface Definition

The following figure shows the Arduino interface definition of BC92-TE-B.

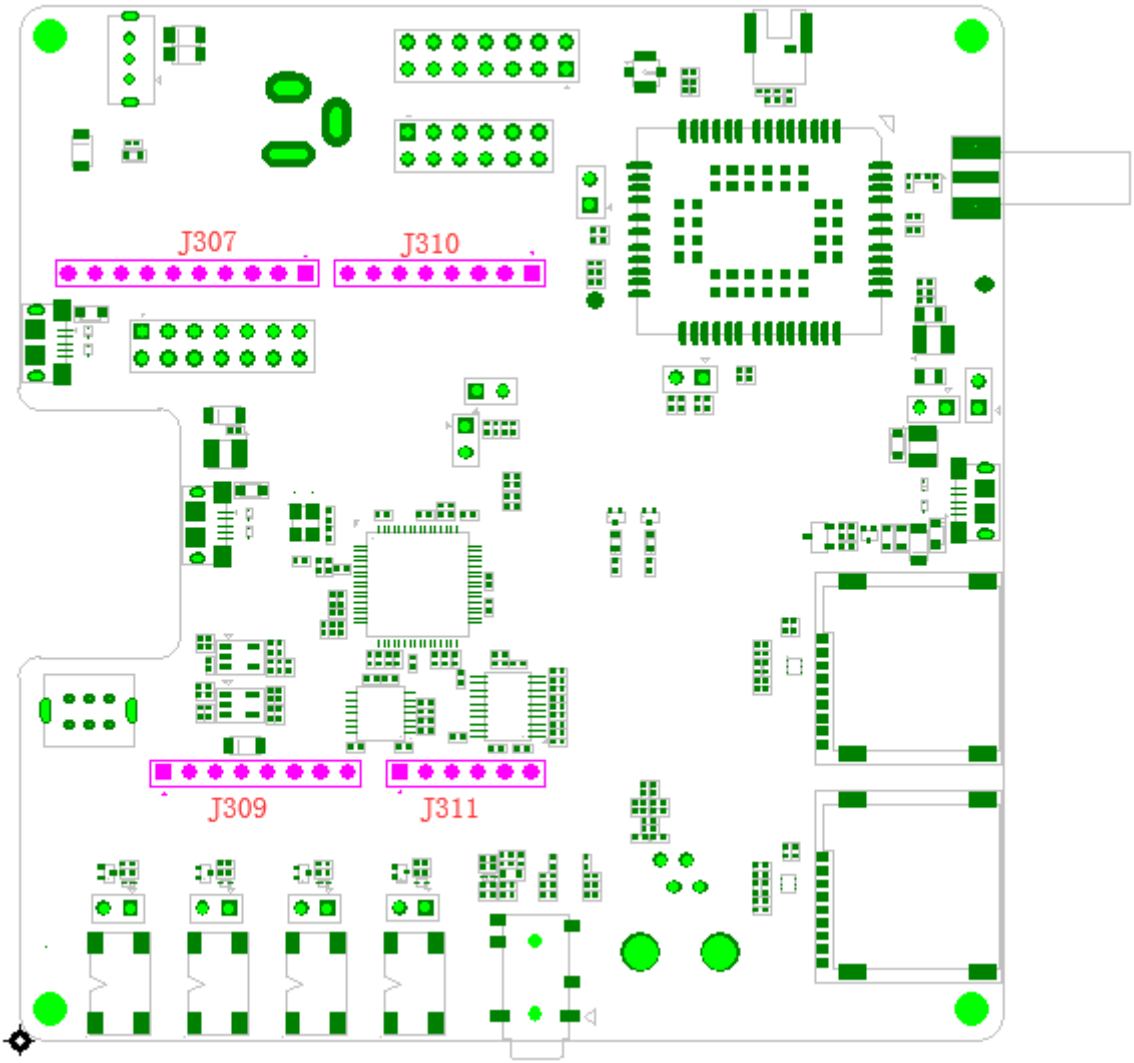

Figure 3: Arduino Interface Definition

3 Operation Procedures

This chapter mainly illustrates the operation procedures of BC92-TE-B. BC92-TE-B can be used alone to upgrade and debug NB-IoT/GSM/GPRS applications. Meanwhile, it can also be used in conjunction with an STM32 Nucleo-64 development board via Arduino interface to develop NB-IoT applications based on STM32. The following part describes the two approaches in detail.

3.1. Operation Procedure with Single Board

This section elaborates the interface distribution diagram and operation procedures when using the BC92-TE-B alone.

3.1.1. Interface Diagram

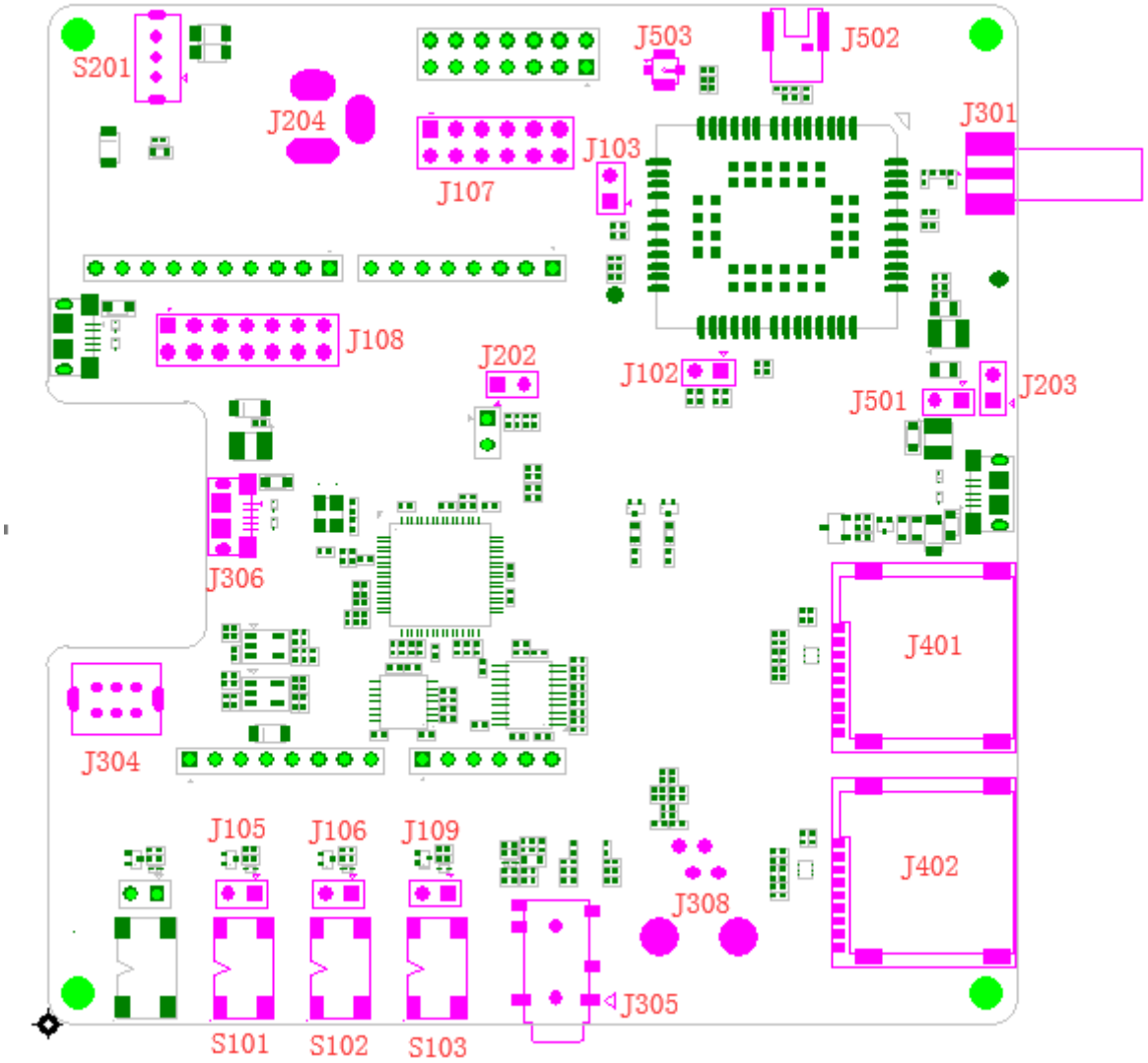

Figure 4: Interface Diagram When Using BC92-TE-B Alone

3.1.2. Operation Procedure When Using Single Board

1. Install USB-UART driver, which can be downloaded from the following address: https://www.ftdichip.cn/Drivers/VCP.htm;
2. Insert Micro USIM card (NB-IoT/GSM card) into J401, or insert Micro USIM card (NB-IoT card) into J402;
3. Connect a rod antenna with SMA connector on J301;
4. Switch the UART_SWITCH J304 to “MAIN UART TO USB” state;
5. Connect the J306 (USB Interface) with PC via Micro USB cable, switch S201 to “ON”. After turning on BC92-TE-B, UART port information will be shown in the device manager on PC, as manifested in the following figure. “USB Serial Port (COM19)” (corresponding to “USB Serial Converter A”) is

connected to the main port of BC92 and can be used for AT command communication and firmware upgrade*. “USB Serial Port (COM20)” (corresponding to “USB Serial Converter B”) is connected to the debug port of BC92 and can be used for debugging, debug log output and firmware upgrade. For details of port configuration, please refer to *Quectel_ BC92_Hardware_Design.*

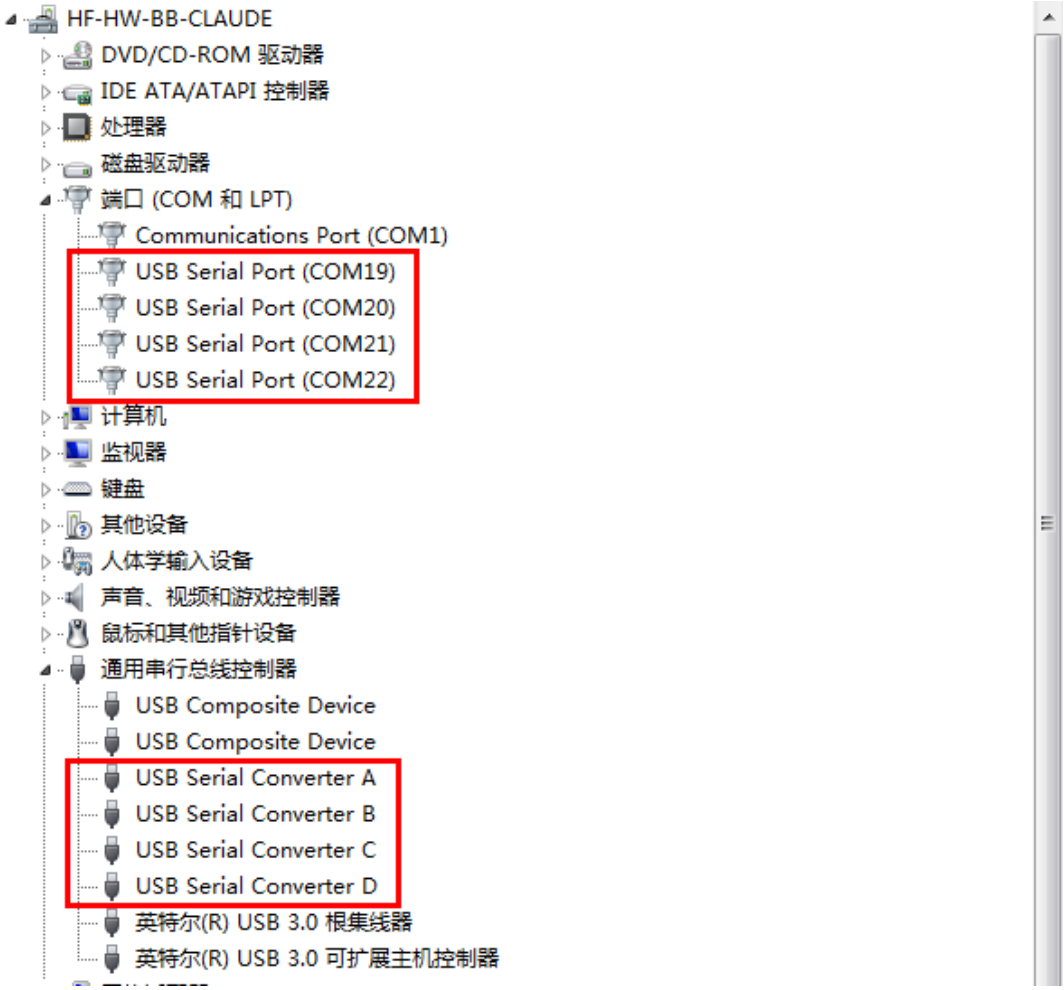

Figure 5: UART Ports Displayed on PC

NOTES

1. In this process, S102 can be used to reset the BC92 module. S103 can be used to wake up BC92 from PSM.
2. If it is the GSM network that is applied, power should be supplied with a power adapter, of which power supply capacity should be no less than 2A.
3. “*” means under development.

3.2. Operation Procedure with Multi Boards

This section elaborates the operation procedure when using BC92-TE-B in conjunction with an STM32 Nucleo-64 development board.

3.2.1. Interface and Modification Diagrams

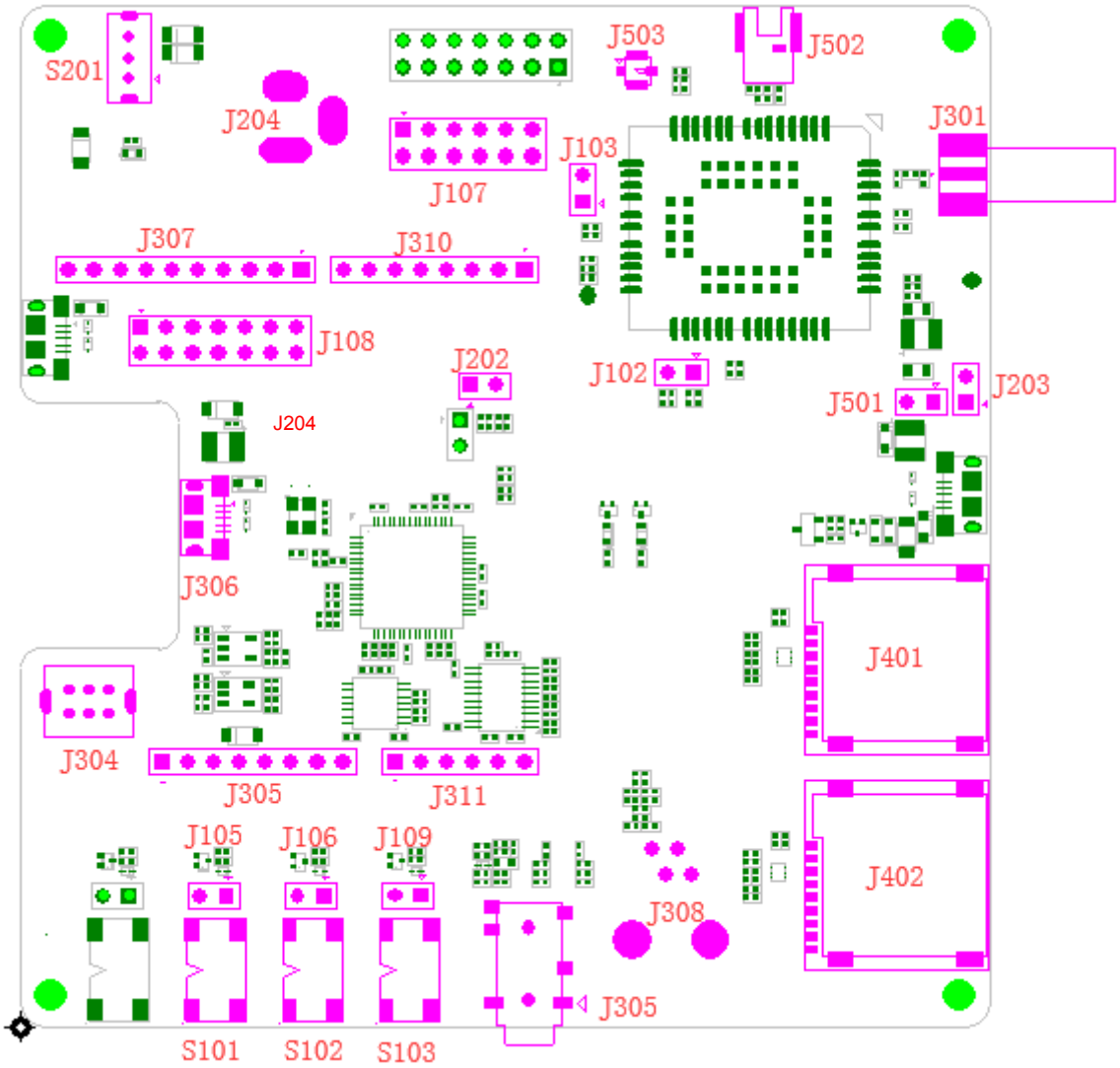

Figure 6: Interface Diagram When Using Multi Boards

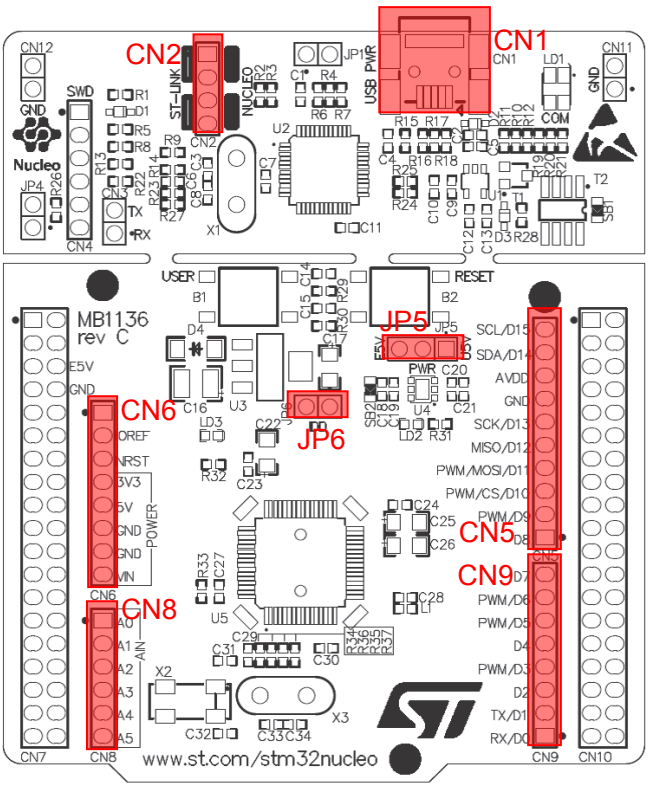

Figure 7: STM32-Nucleo Modification Diagram (Top View)

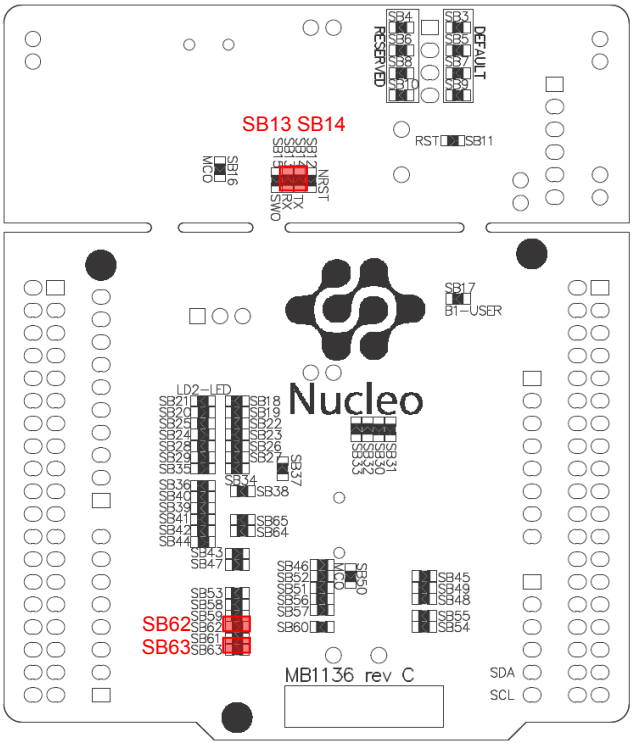

Figure 8: STM32-Nucleo Modification Diagram (Bottom View)

3.2.2. Operation Procedure When Using Multi Boards

1. Install driver for STM32-Nucleo board, which can be downloaded from the following address: http://www.st.com/content/st_com/en/products/evaluation-tools/product-evaluation-tools/mcu-eval-tools/stm32-mcu-eval-tools/stm32-mcu-nucleo/nucleo-l476rg.html;
2. Install USB-UART driver, which can be downloaded from the following address: https://www.ftdichip.cn/Drivers/VCP.htm;
3. Remove 0Ω resistors of SB13 and SB14 with soldering iron, and then solder them onto SB62 and SB63 respectively;
4. Short-circuit pin 1 and pin 2 of CN2, pin 3 and pin 4 of CN2, pin 1 and pin 2 of JP5 and pin 1 and pin 2 of JP6;
5. Insert Micro USIM card (NB-IoT/GSM card) into J401, or insert Micro USIM card (NB-IoT card) into J402;
6. Connect rod antenna with SMA connector on J301;
7. Switch UART_SWITCH J304 to “MAIN UART TO MCU” state;
8. Connect Arduino interface to STM32-Nucleo board, and connect J307, J309, J311 and J310 of BC92-TE-B to CN5, CN6, CN8 and CN9 respectively;
9. Connect CN1 of STM32-Nucleo board with PC via Mini USB cable, and switch S201 to “ON”. After powering on BC92 module, device information will be shown in the device manager on PC.

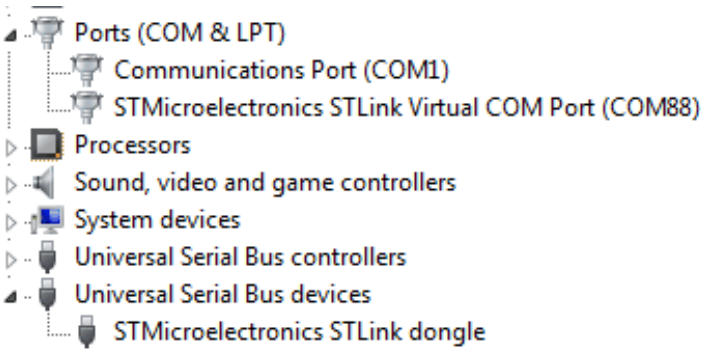

Figure 9: ST-LINK Interface Displayed on PC

3.2.3. Description of Pin Connection

The table below shows the pin connection between BC92-TE-B and STM32-L476RG MCU.

Table 3: Pin Connection between BC92-TE-B and STM32-L476RG MCU

No.	MCU (Morpho)	Arduino		BC92-TE-B	Remark
1	PA2	D1	CN9-2	UART_MCU_TX	Connect to RX of main UART

2	PA3	D0	CN9-1	UART_MCU_RX	Connect to TX of main UART
3	PA7	D11	CN5-4	PSM_EINT_N	PSM wake-up
4	PA6	D12	CN5-5	PWRKEY_N	Active high
5	PA5	D13	CN5-6	RESET_N	Active high
6	PA0	A0	CN8-1	RI	
7	+5V	+5V	CN6-5	+5V	5.0V power supply
8	GND	GND	CN5-7, CN6-6, CN6-7	GND	Ground

The following figure shows the pin connection between BC92-TE-B and STM32-L476RG MCU.

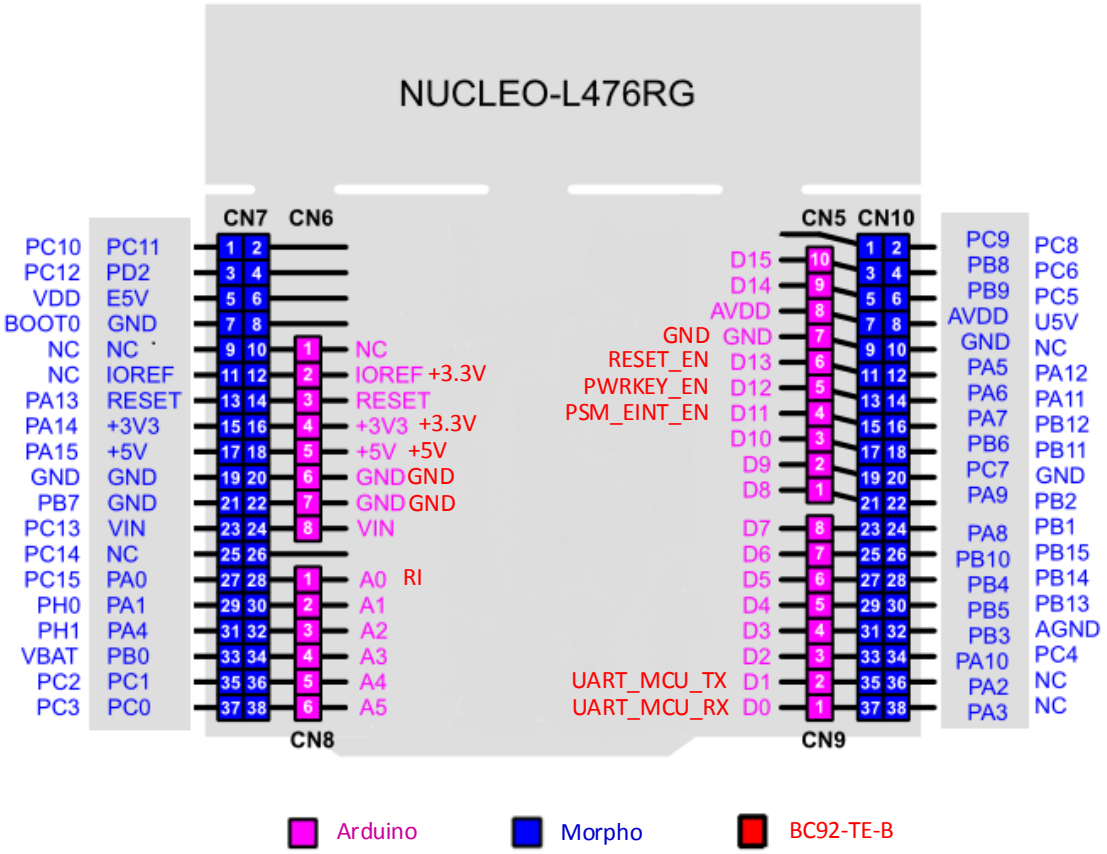

Figure 10: Pin Connection between BC92-TE-B and STM32-L476RG MCU

4 Electrical Performance and Reliability

4.1. Absolute Maximum Ratings

Absolute maximum ratings for power supply and voltage on digital and analog pins of BC92 module are listed in the following table.

Table 4: Absolute Maximum Ratings

Parameter	Min.	Max.	Unit
+5V		6	V
VBAT		4.35	V
Voltage at Digital Pins		3.06	V
Voltage at Analog Pins		1.8	V

4.2. Operation and Storage Temperature

The operation and storage temperature are listed in the following table.

Table 5: Operating Temperature

Parameter	Min.	Typ.	Max.	Unit
Operation Temperature Range [1)]	-25	+25	+75	ºC
Extended Temperature Range [2)]	-40		+85	ºC
Storage Temperature Range	-40		+90	ºC

NOTES

1. [1)] Within operation temperature range, the module is 3GPP compliant.
2. [2)] Within extended temperature range, the module remains the ability to establish and maintain functions such as SMS and data transmission, without any unrecoverable malfunction. Radio spectrum and radio network will not be influenced. While there may be several parameters, such as P_{out} reducing in value, exceeding the specified tolerances of 3GPP. When the temperature returns to the normal operating temperature level, the module will comply with 3GPP specifications again.

5 Mechanical Dimensions

This chapter describes the mechanical dimensions of BC92-TE-B. All dimensions are measured in mm. The tolerances for dimensions are ±0.15mm.

5.1. Mechanical Dimensions of BC92-TE-B

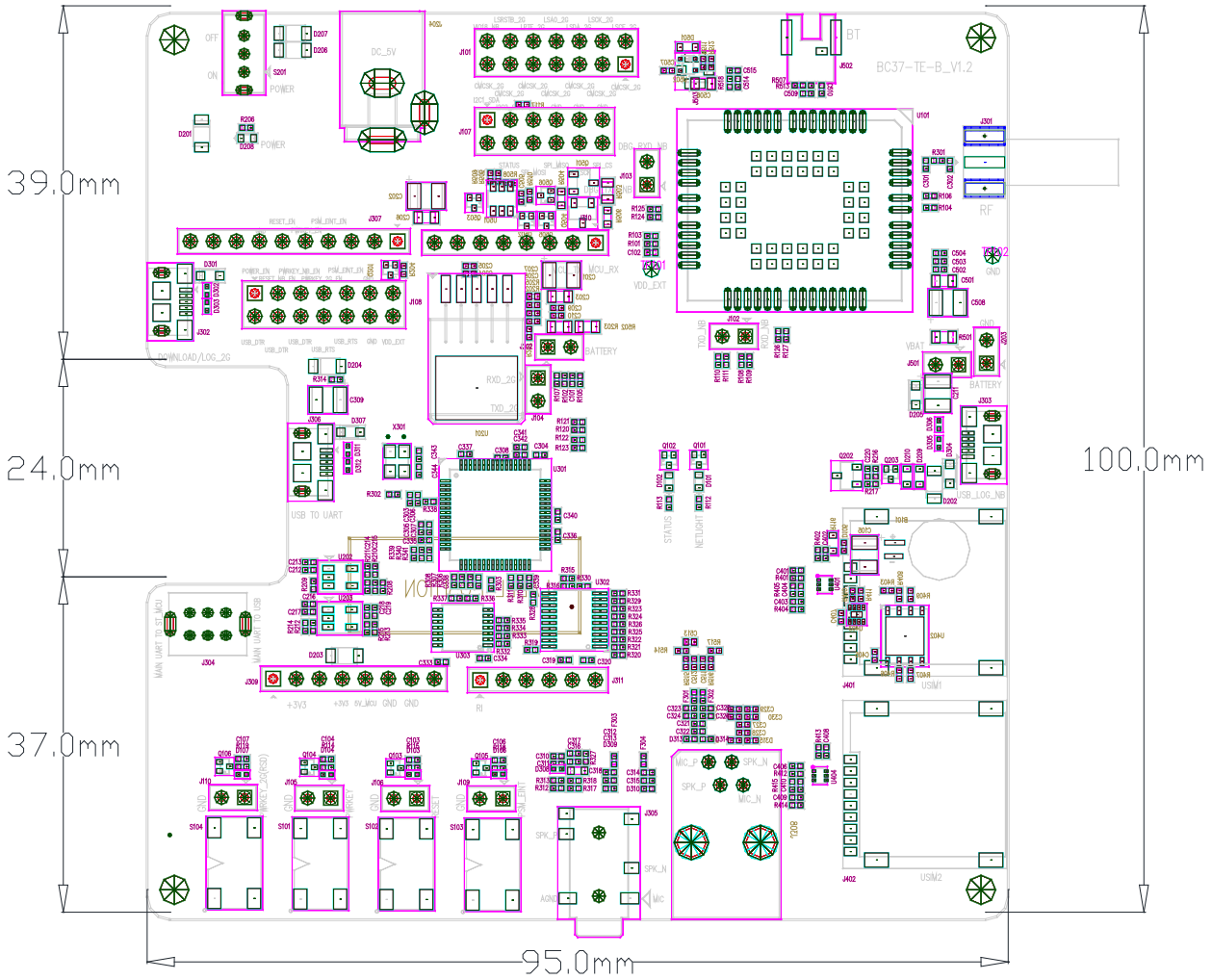

Figure 11: Dimensions of BC92-TE-B (Top View)

5.2. Top and Bottom View of BC92-TE-B

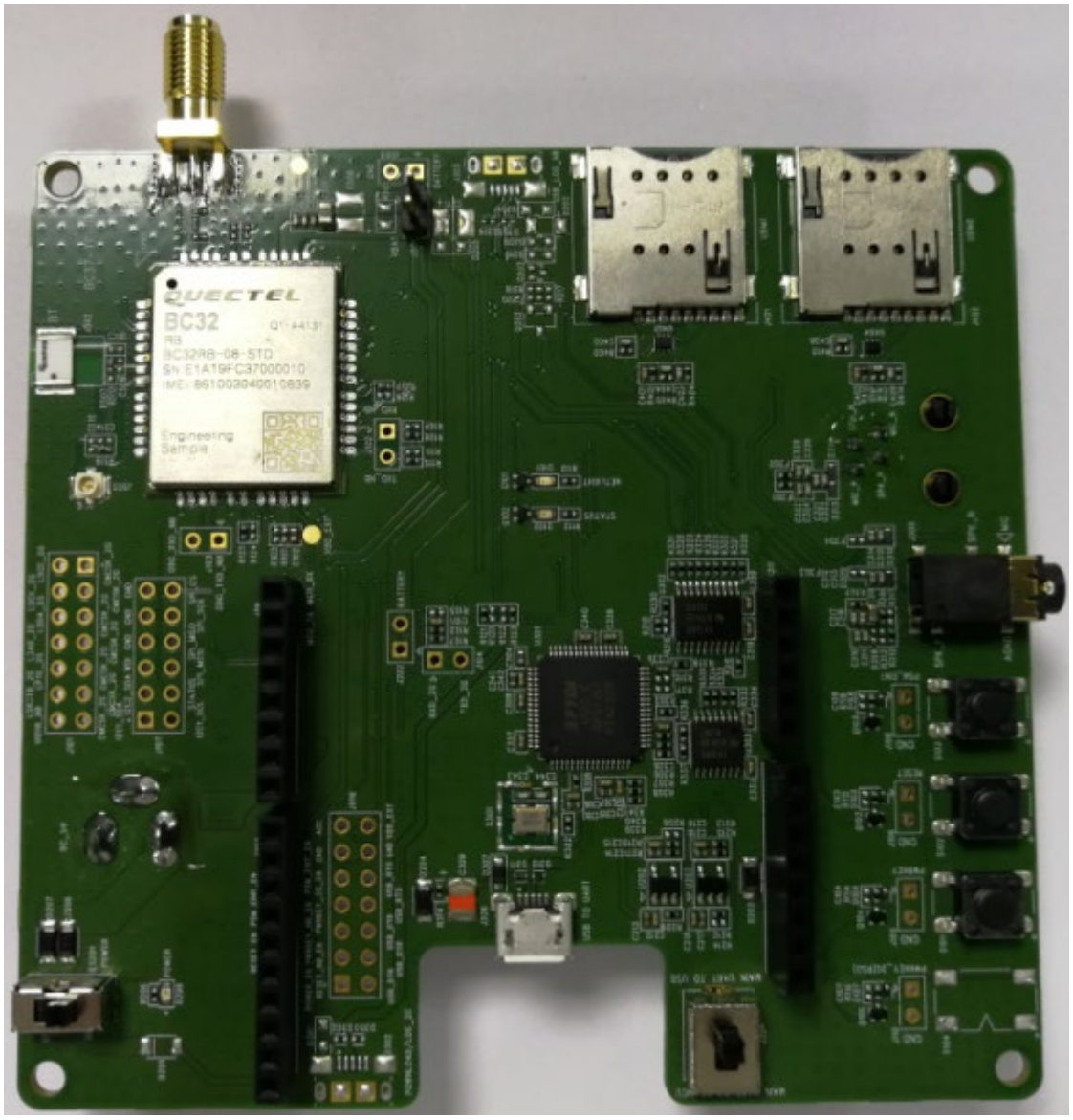

Figure 12: Top View of the BC92-TE-B

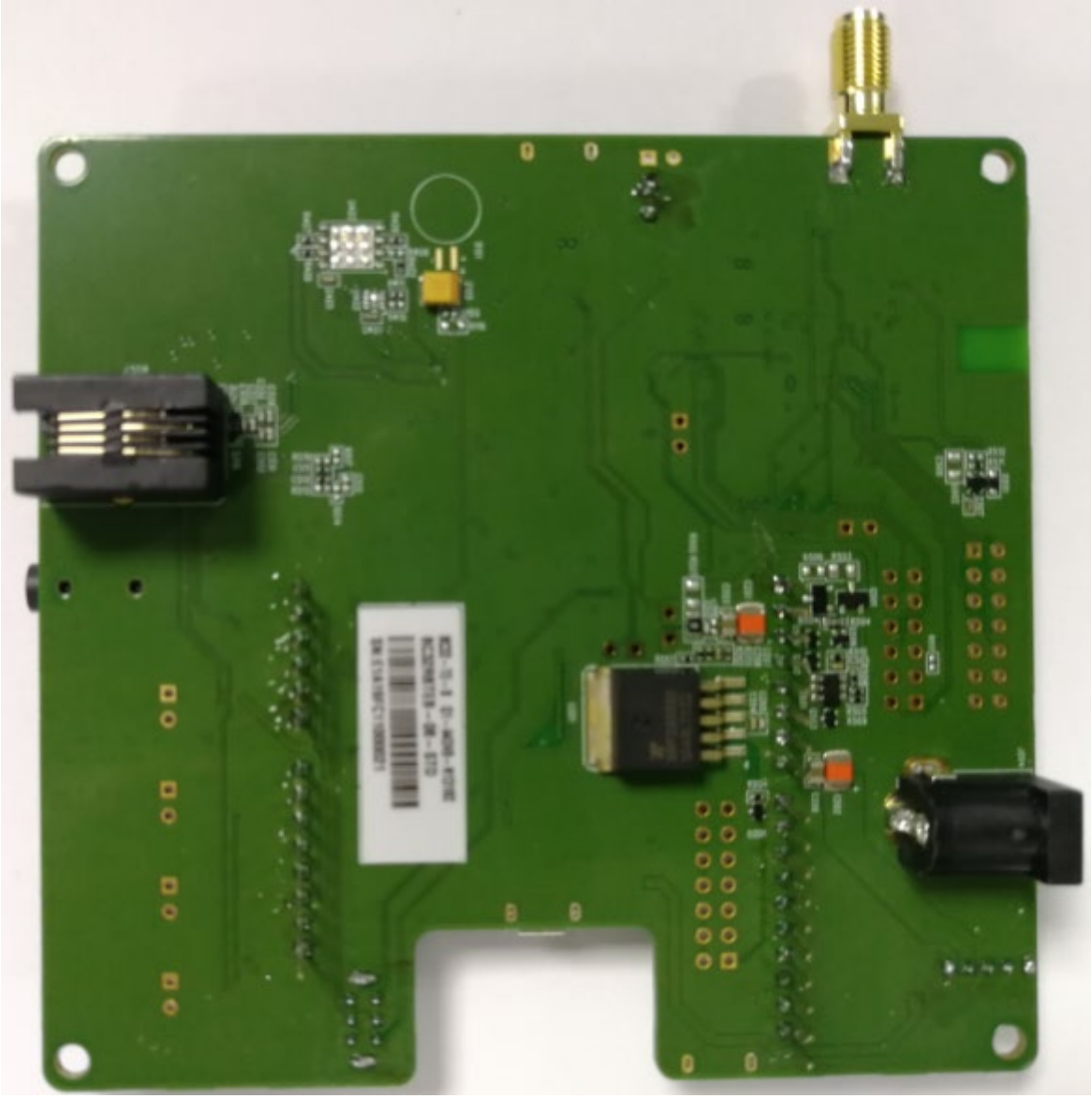

Figure 13: Bottom View of the BC92-TE-B

6 BC92-TE-B Kit and Accessories

6.1. BC92-TE-B Kit

Figure 14: BC92-TE-B Kit

6.2. BC92-TE-B Accessories

Figure 15: BC92-TE-B and Accessories

Table 6: Accessory List

Accessories	Description.	Quantity
RF Antenna	Rod antenna with SMA connector	1
Cable	Micro USB cable	1
Instruction	Instruction about BC92-TE-B connection and relevant accessories	1

7 Appendix A References

Table 7: Related Documents

No.	Document Name	Remark
[1]	Quectel_BC92_Hardware_Design	BC92 hardware design specifications

Table 8: Terms and Abbreviations

Abbreviation	Description
GPRS	General Packet Radio Service
LPWA	Low Power Wide Area
DFOTA	Delta Firmware Upgrade Over-the-air
GSM	Global System for Mobile Communications
MCU	Microcontroller Unit
NB-IoT	Narrow Band Internet of Things
UART	Universal Asynchronous Receiver & Transmitter
USB	Universal Serial Bus
USIM	Universal Subscriber Identification Module